Sprinter Van Upper Cabinets

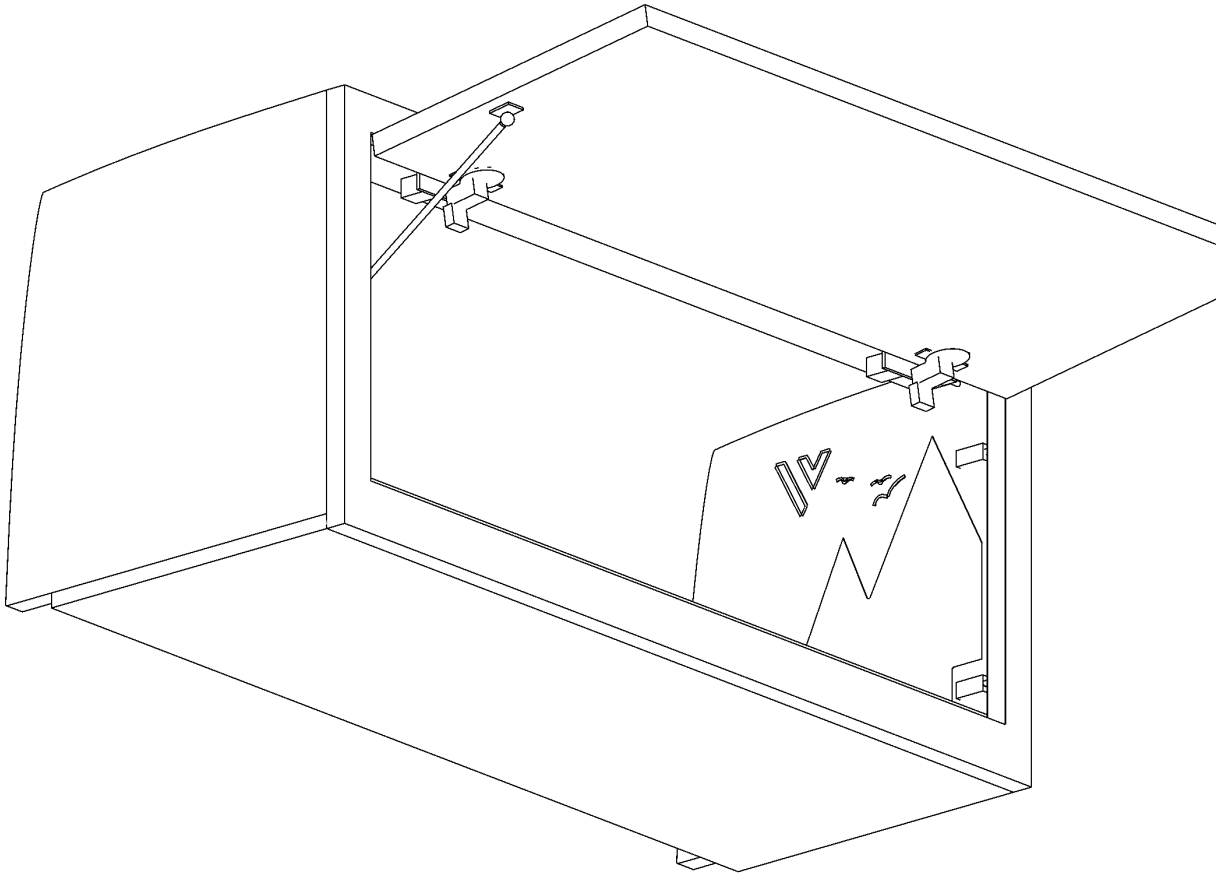



11x

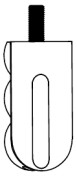

13x



1x

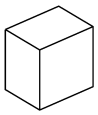

1x

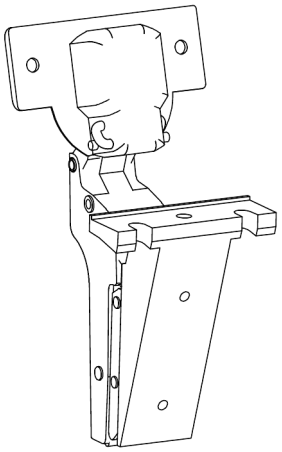

2x

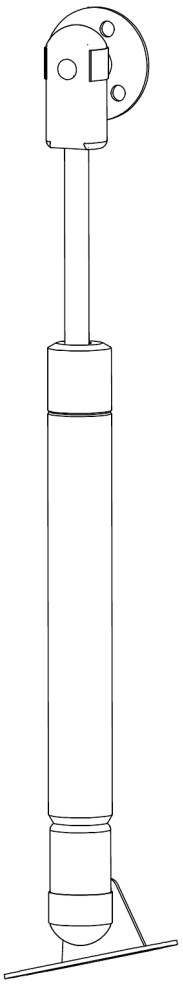

1x

1

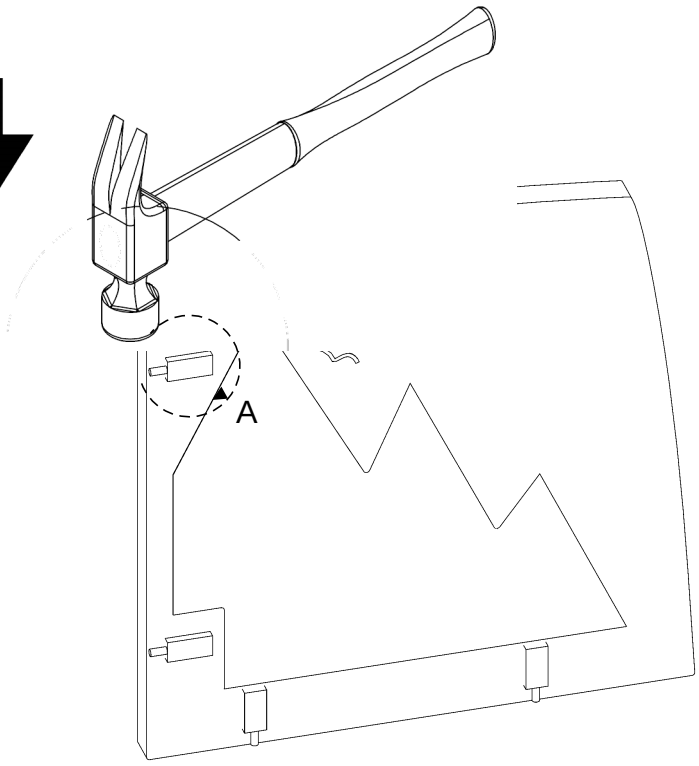

DETAIL A

Gently insert cabineos into places with a claw hammer

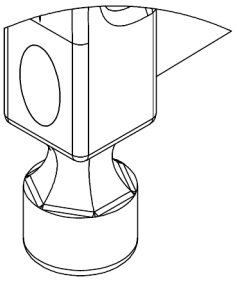

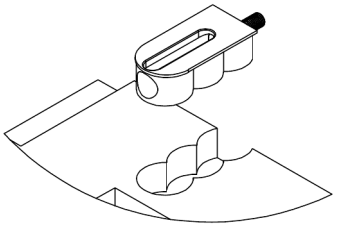

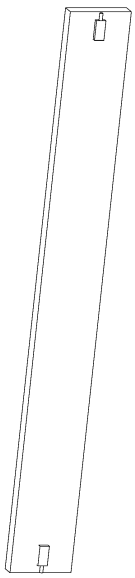

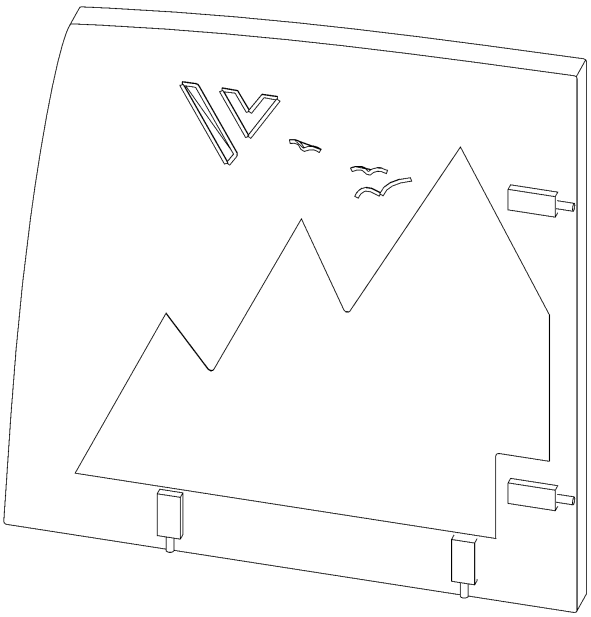

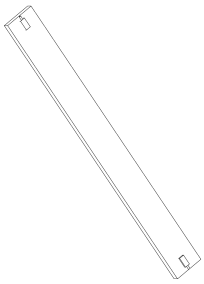

2

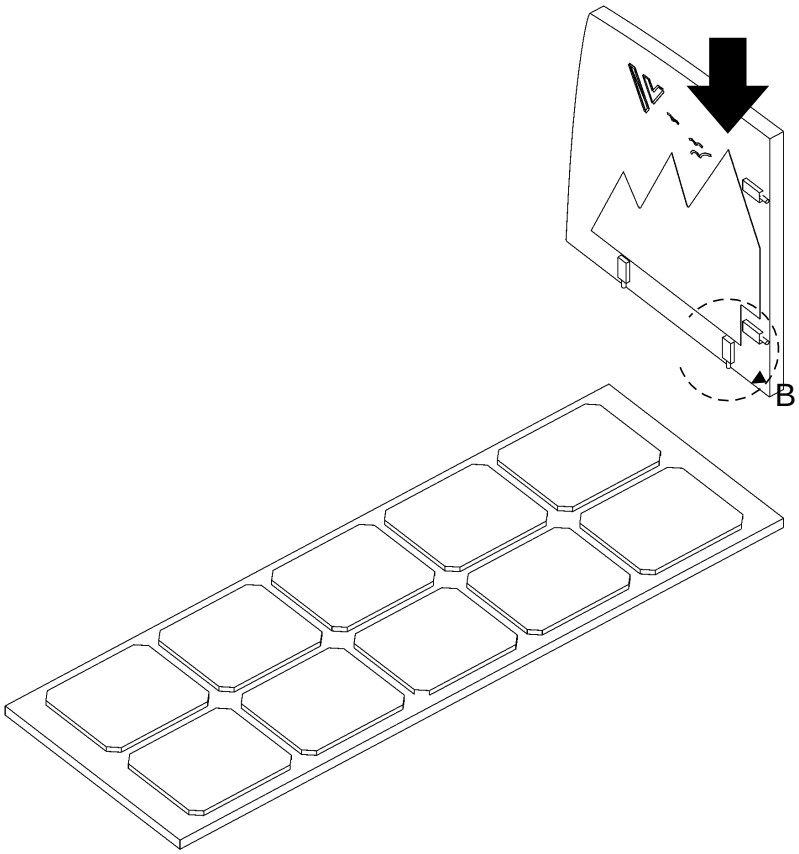

DETAIL B
Use cabineo bit to combine side 1 to bottom

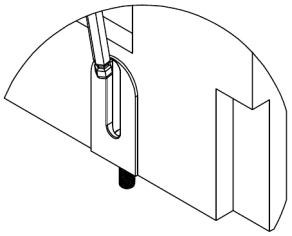

3

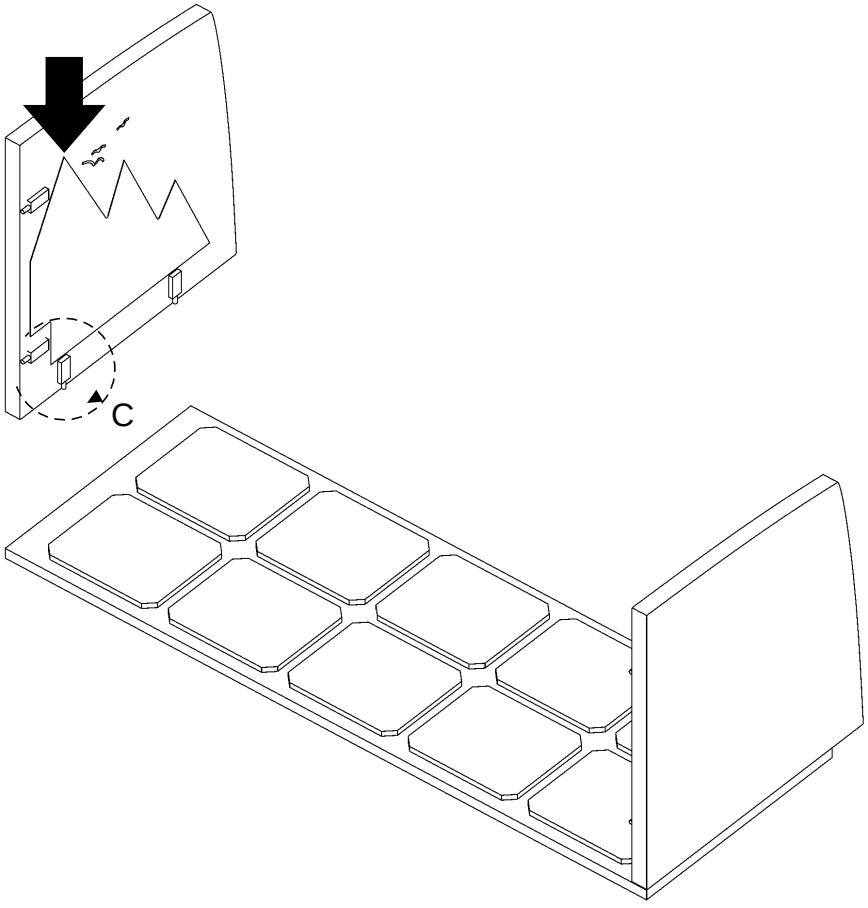

DETAIL C
Use cabineo bit to combine side 2 to bottom

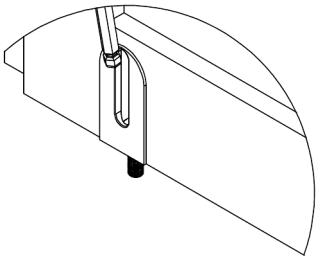

4

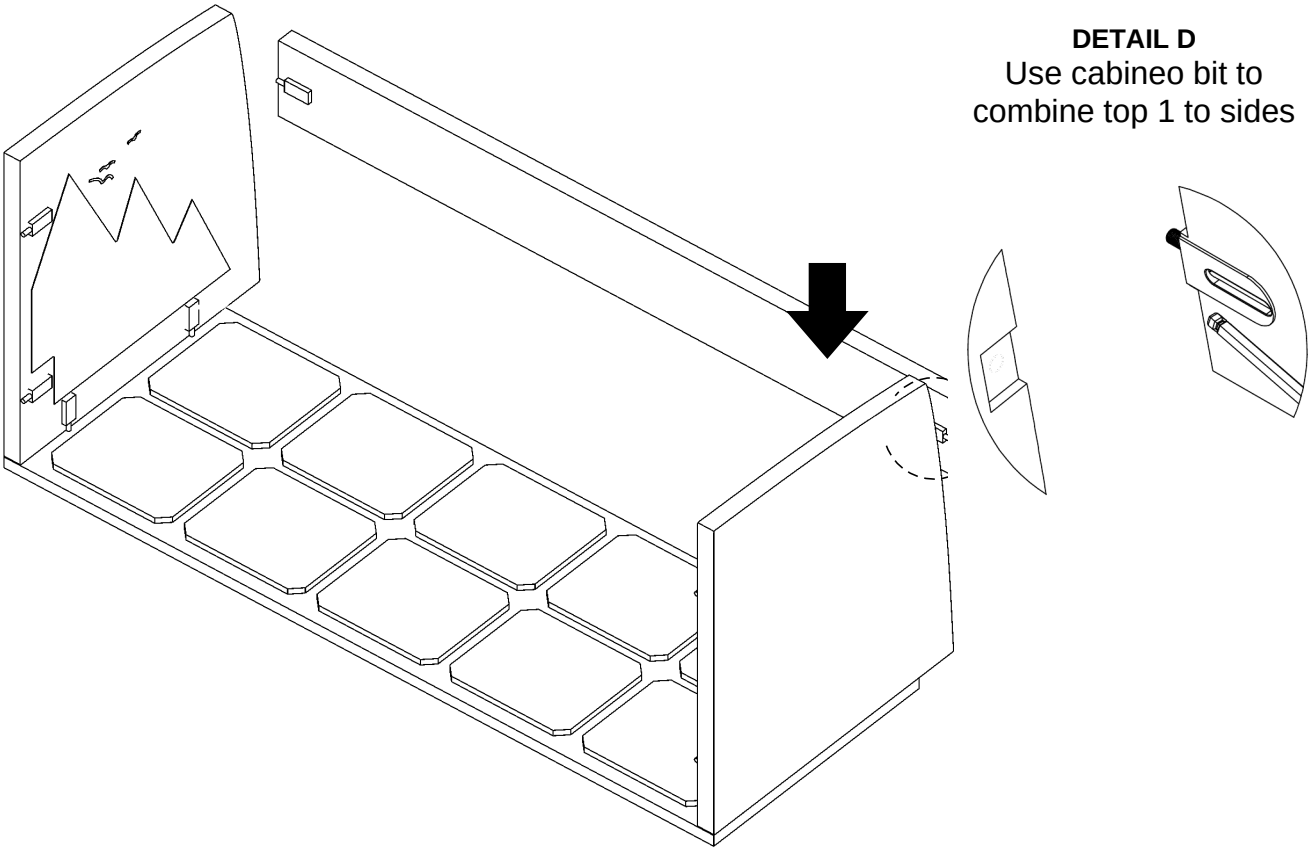

DETAIL D
Use cabineo bit to
combine top 1 to sides

5

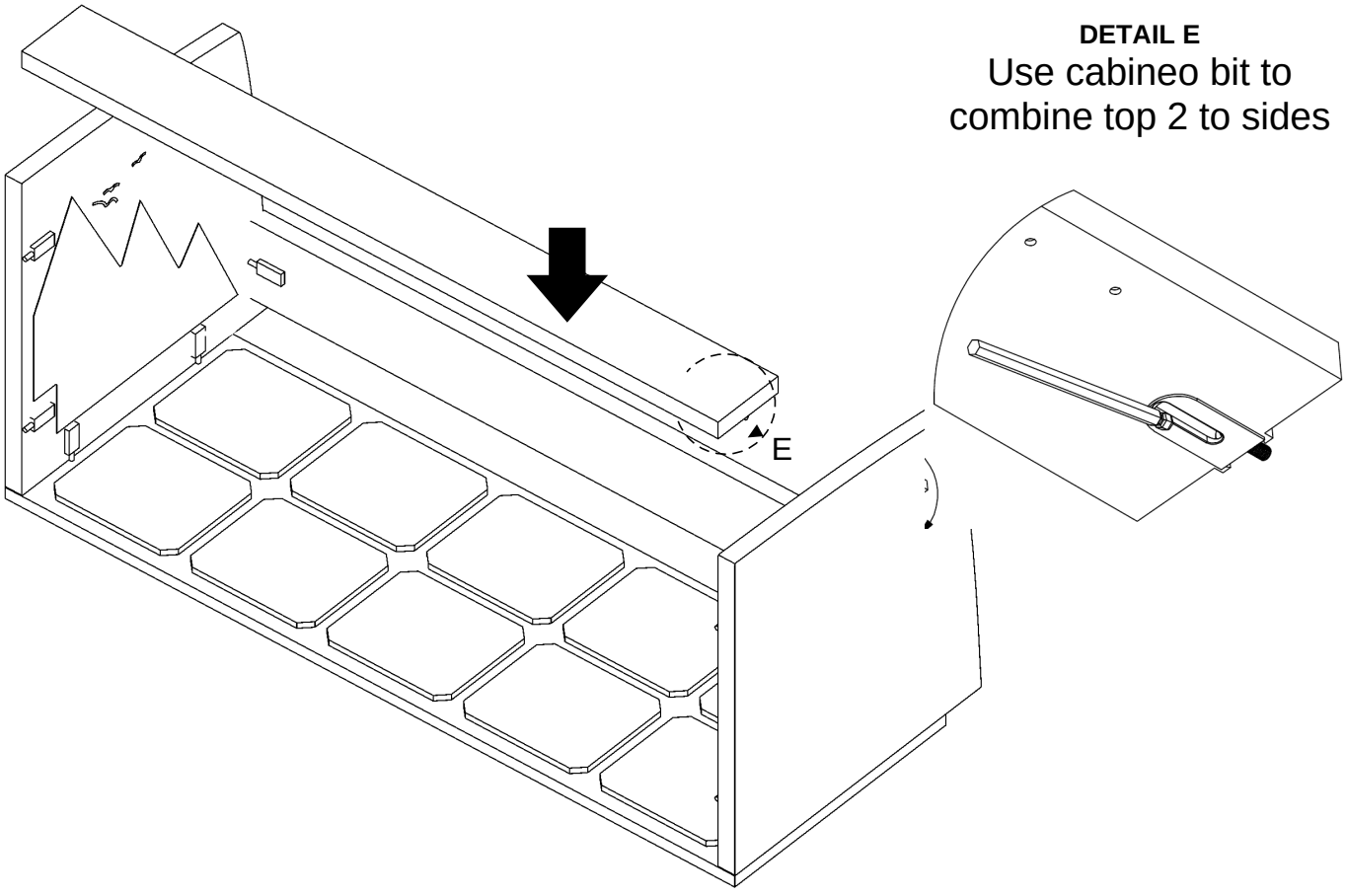

DETAIL E
Use cabineo bit to
combine top 2 to sides

6

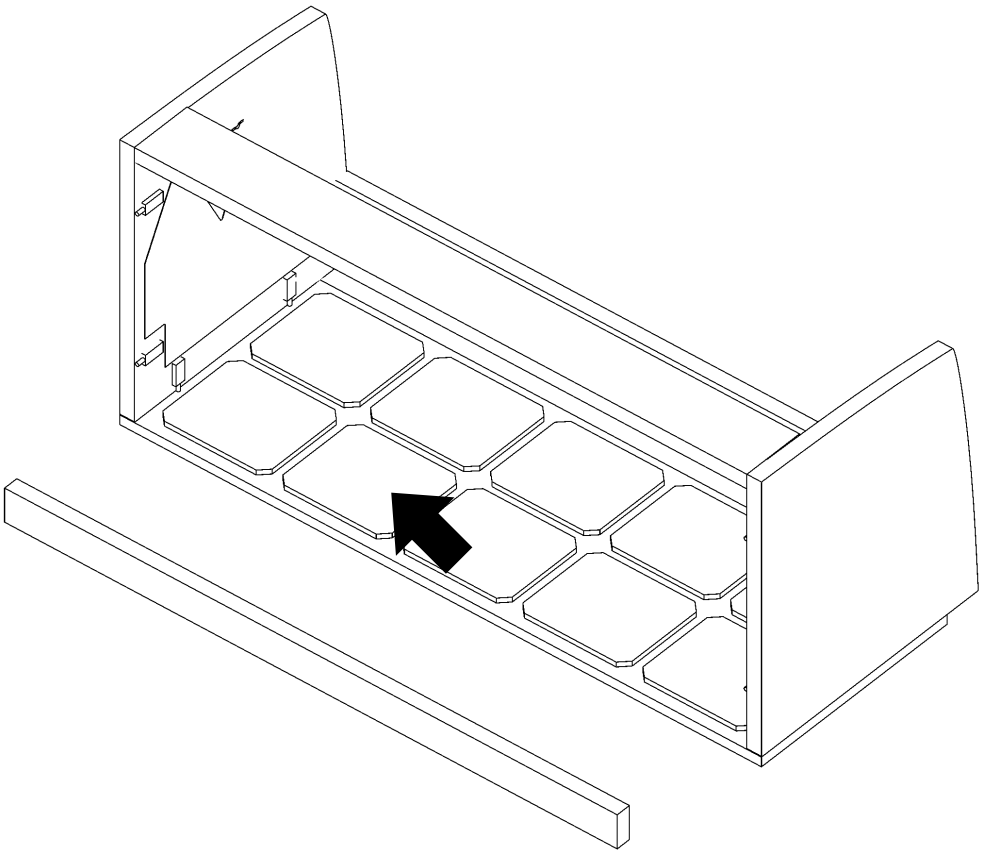

Place Front support

7

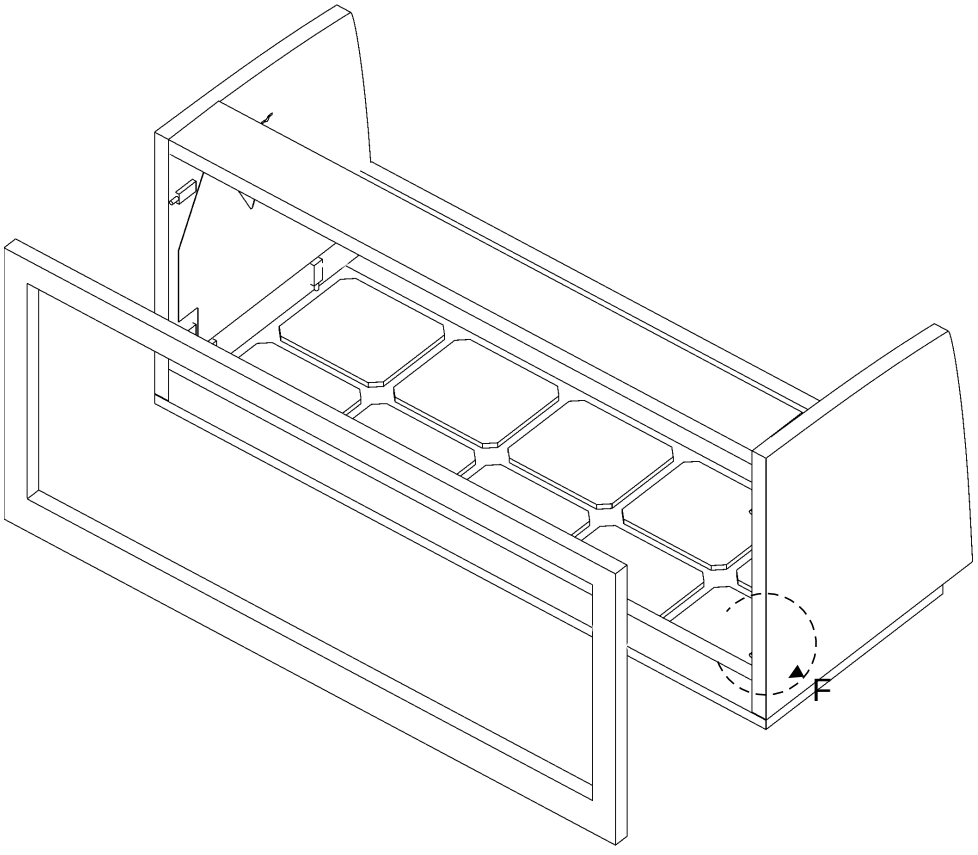

DETAIL F

Use cabineo bit to combine face frame to sides

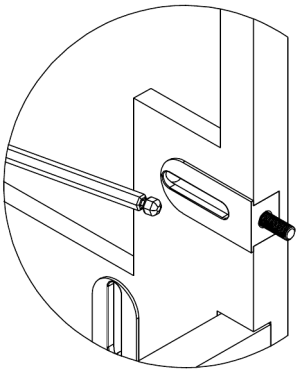

8

DETAIL G
Use screw bit to
combine hinges to face frame

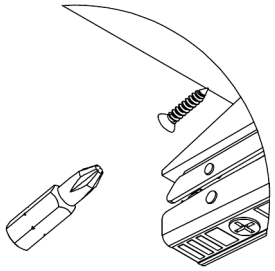

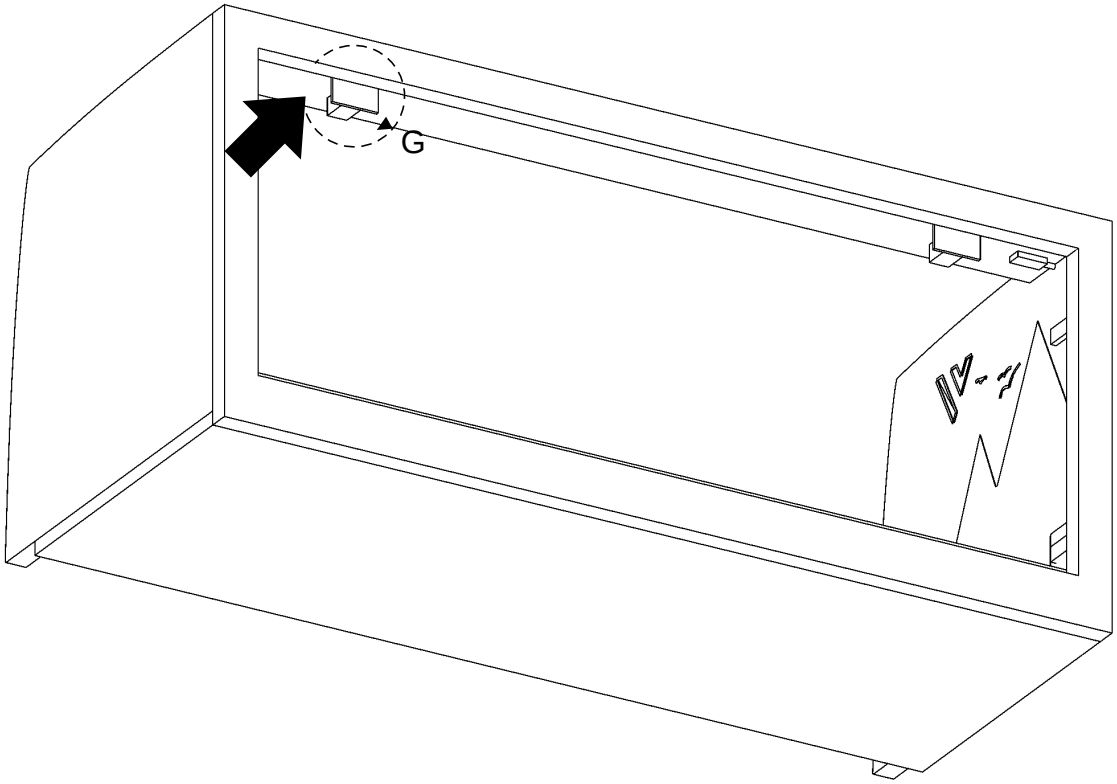

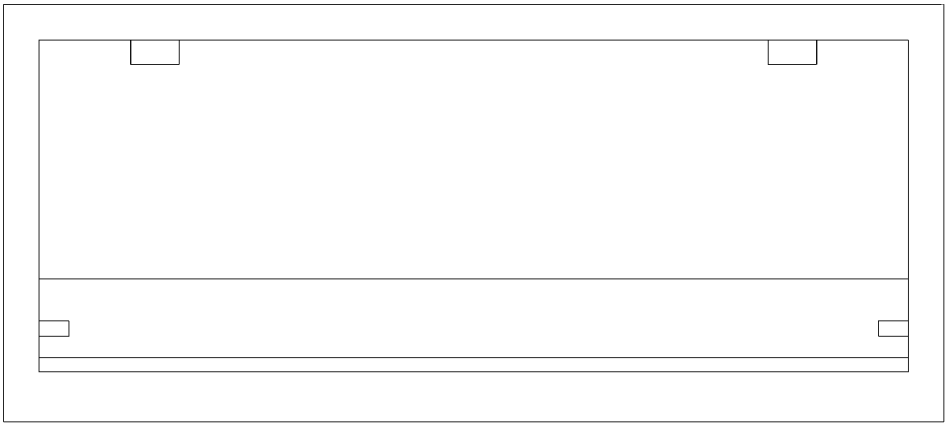

9

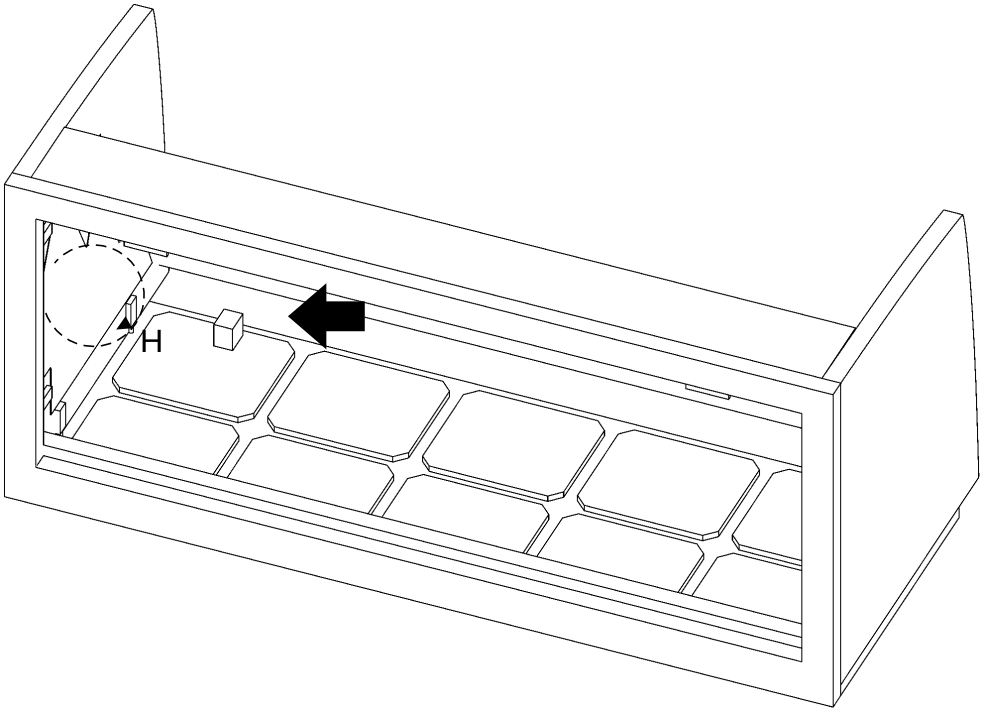

DETAIL H
Place wood block on the inside of the left side

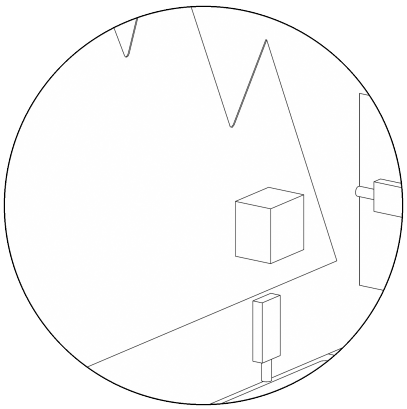

10

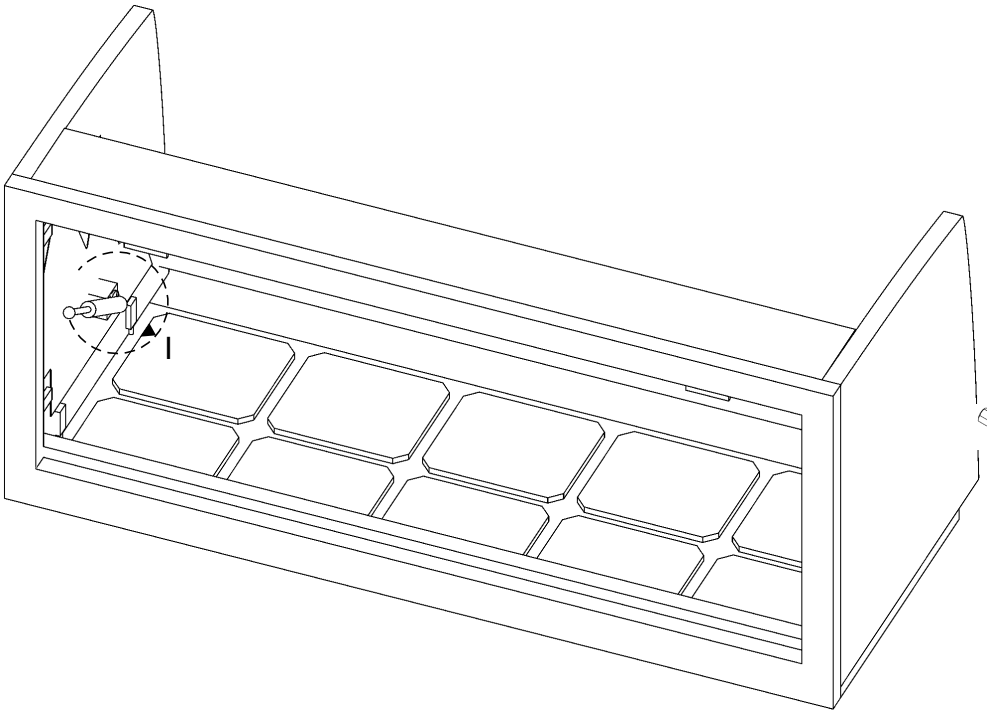

DETAIL I
Use Screw bit to combine gaskit through block into side

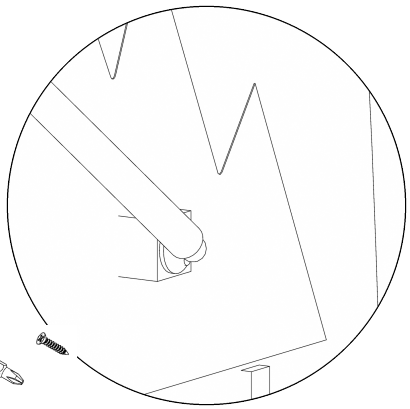

11

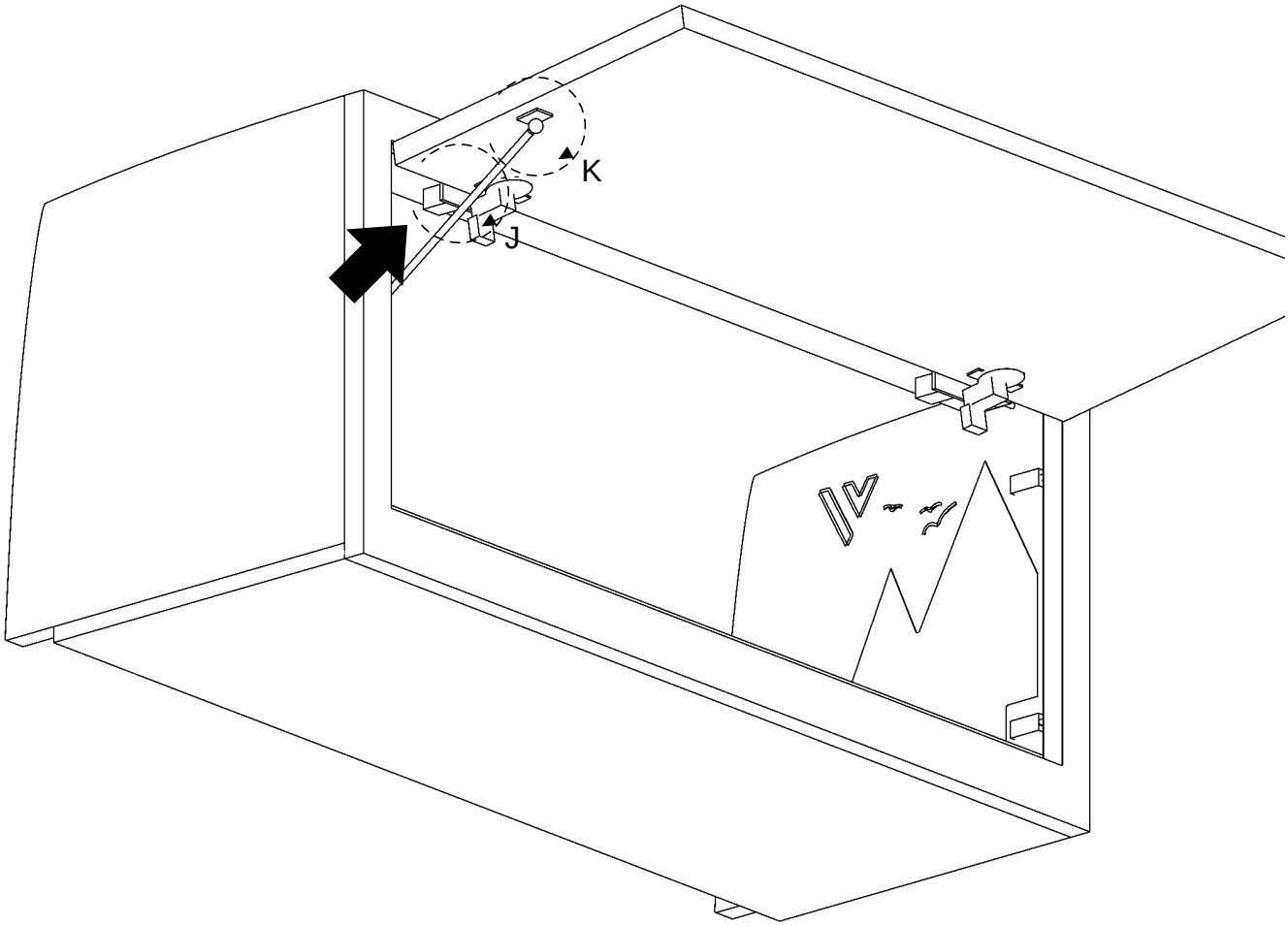

DETAIL J

Use Screw bit to
combine hinges to door

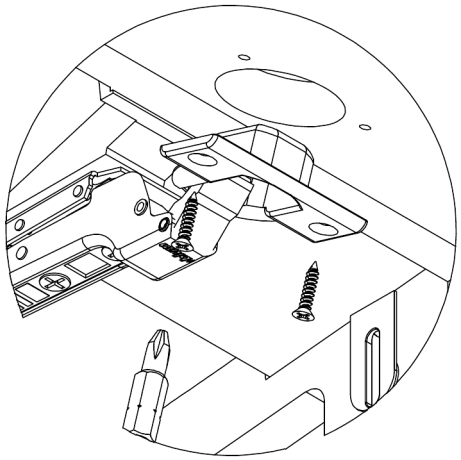

DETAIL K

Use Screw bit to
combine gaskit to door

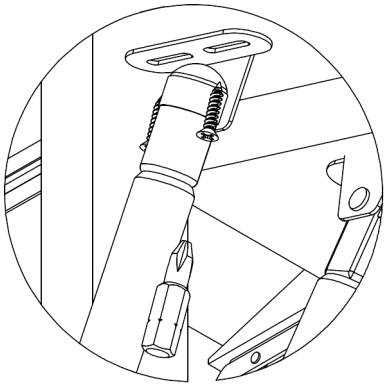

12

Close the door

